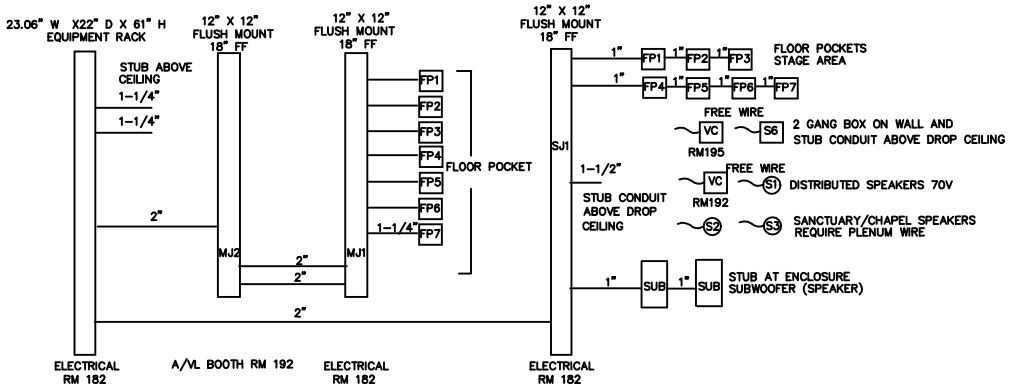

A SANCTUARY SOUND SYSTEM CONDUIT RISER
NO SCALE/ 3/4' CONDUIT IF NOT SPECIFIED

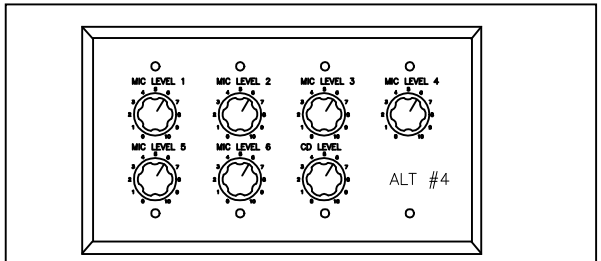

C CHAPEL VOLUME CONTROL PANEL DETAIL
NO SCALE

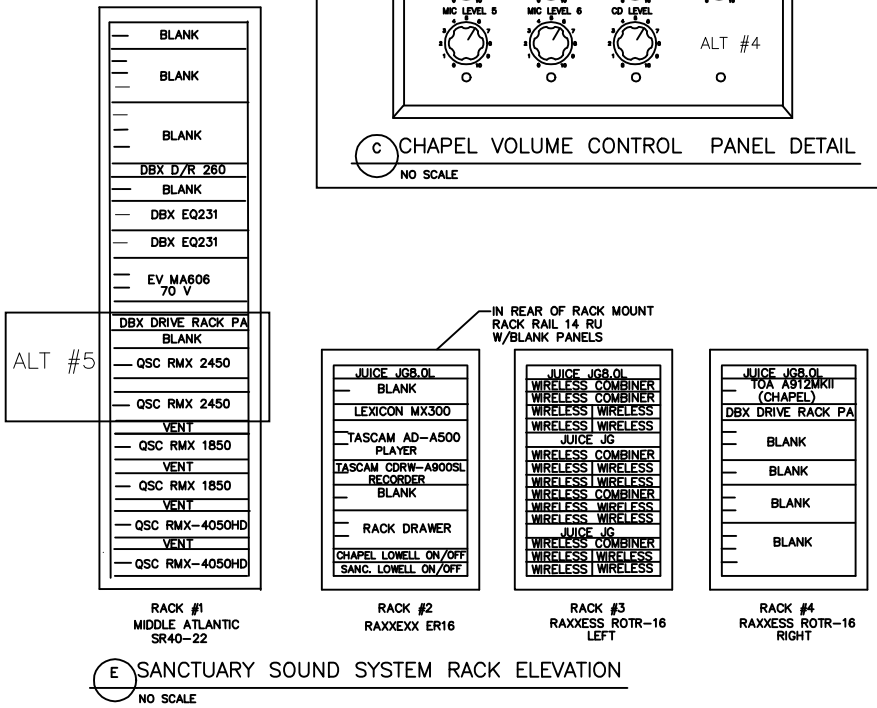

E SANCTUARY SOUND SYSTEM RACK ELEVATION
NO SCALE

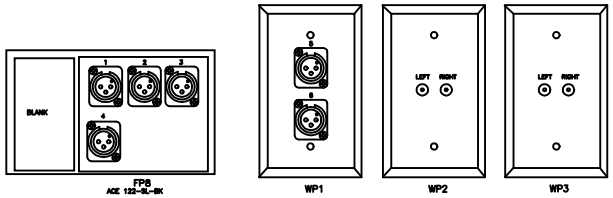

B ALT#4 CHAPEL PANEL DETAIL
NO SCALE

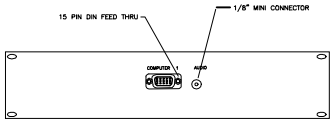

B SANCTUARY PROJ CONTROL PANEL
NO SCALE

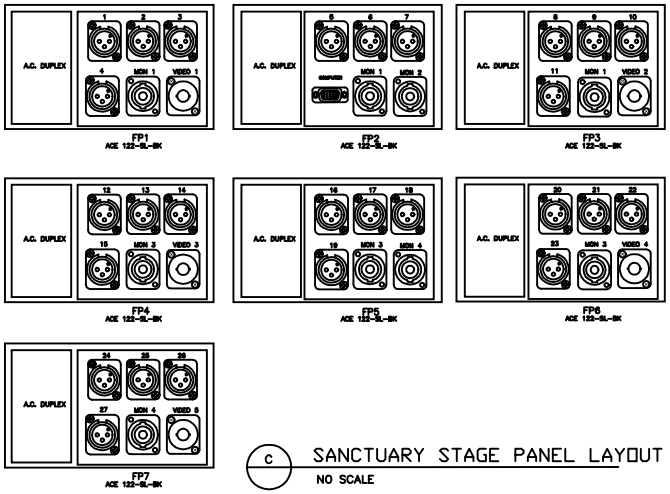

C SANCTUARY STAGE PANEL LAYOUT
NO SCALE

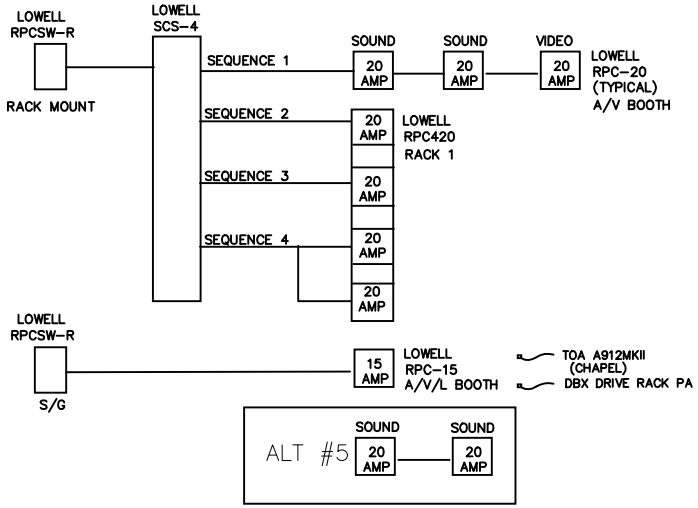

D SANCTUARY/CHAPEL ON/OFF RELAY CONTROL
NO SCALE

SOUND SYSTEM KEY TO PANELS JUNCTION BOXES AND PULLBOXES

PANEL #	BACKBOX SIZE HxWxD (IN.)	MOUNTING DETAILS	SPECIAL INFORMATION
FP1 – FP7	ACE 122-CLBK	FLUSH-MOUNT;	ALTER/STAGE AREA RM 185
FP-8	ACE 122-CLBK	FLUSH-MOUNT; CHAPEL STAGE	CHAPEL ROOM 189
MJ1	12" X 12" X4"	SURFACE-MOUNT; 18" A.F.F.	ELECTRICAL ROOM 182
MJ2	12" X 12" X4"	SURFACE-MOUNT; 18" A.F.F.	A/V/L BOOTH RM192
SJ1	12" X 12" X4"	SURFACE -MOUNT; 18" A.F.F.	ELECTRICAL ROOM 182
RACK 1	23.06" W X 61.37" H X 22" D	SURFACE-MOUNT; FLOOR STANDING	ELECTRICAL ROOM 182
VP1	4 GANG, DEEP MODEL	FLUSH-MOUNT; 48" A.F.F.	CHAPEL ROOM 189
WP1-WP3	1 GANG, DEEP MODEL	FLUSH-MOUNT; 18" A F.F.	CHAPEL ROOM 189
SUB WOOFER	19.5" x 33.25" x 29.38"	FLUSH-MOUNT WALL ROOM 188	ROOM 183/187
S1	EXISTING CEILING SPKRS	REMOVE FROM SANCTUARY	INSTALL PER PLANS
S2	SANCTUARY SPEAKERS	CEILING MOUNTED	SANCTUARY ROOM 183
S3	EVID 8.2	FLUSH MOUNTED; CEILING	CHAPEL ROOM 189
S6	EV PR122/64	MOUNT FROM CEILING	CHAPEL ROOM 189
MJ5	12"X12"X4"	SURFACE MOUNT; 18" A.F.F.	CHAPEL ROOM 189
WP4	4 GANG	FLUSH MOUNT; 18" A.F.F.	CHAPEL ROOM 189
VC	1 GANG W S/G P RING	FLUSH-MOUNT; 48" A.F.F.	QTY PER PLANS

NOTES:

1. CONDUIT, PULLBOXES/STRING, JUNCTION BOXES AND BACKBOXES SUPPLIED AND INSTALLED BY ELECTRICAL CONTRACTOR
2. POWER AND GROUNDING INSTALLED BY ELECTRICAL CONTRACTOR AND TERMINATED TO LOCATIONS OF AV RACKS.
3. AV PANELS CONSTRUCTED AND INSTALLED BY A/V/L CONTRACTOR.
4. AV WIRE PULLED AND TERMINATED BY AV CONTRACTOR.
5. WHEN SURFACE-MOUNTED OR PARTLY RECESSED, SCREW-COVER PANEL SHALL BE OF SAME SIZE AS BACKBOX.
6. A/V/L CONTRACTOR TO PROVIDE FLOOR POCKETS AND CONCRETE BOX TO E.C.